SHIMANO

TWIN POWER XD S A-RB TPXD-4000PG

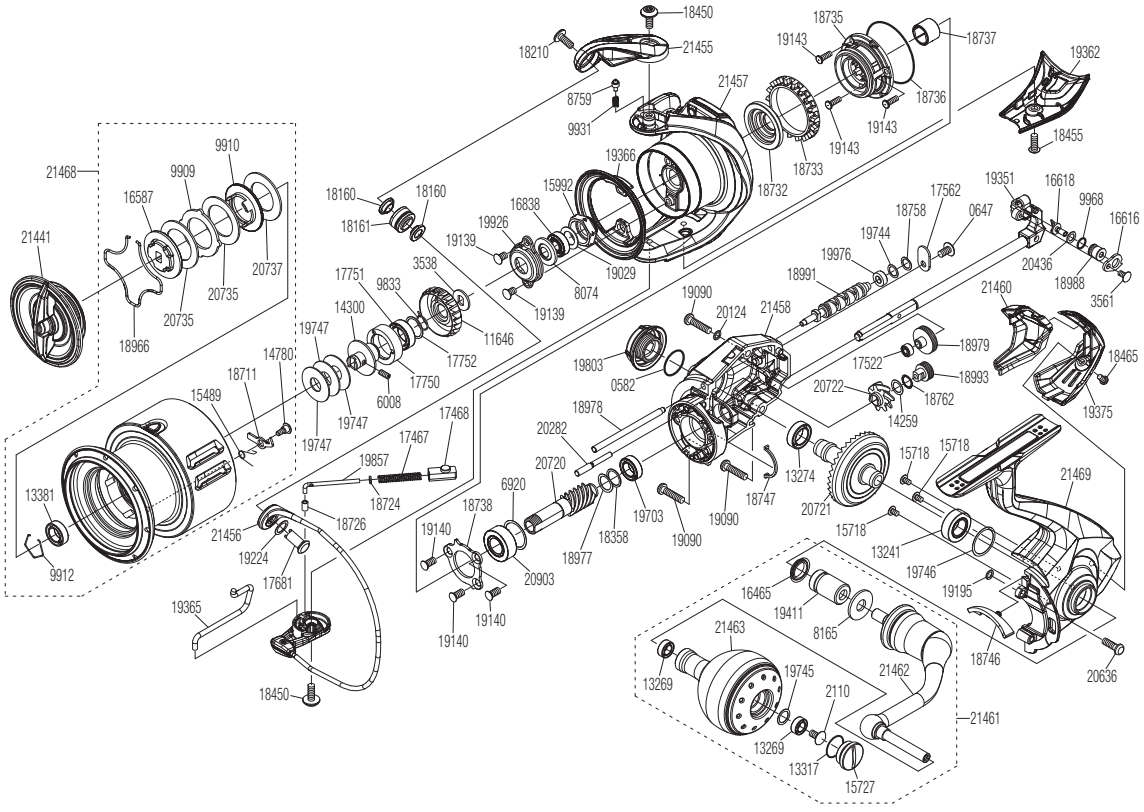

(51SF47H043X)

#	Part No.	Description	#	Part No.	Description	#	Part No.	Description
0582	108WH	O Ring	18160	1020L	Collar	19745	104FH	Washer
0647	10QG5	Screw	18161	101KE	Line Roller Set	19746	101AY	Washer
2110	103E9	Screw	18210	10TLJ	Screw	19747	101AV	Washer
3538	103NX	Spool Support A	18358	10GD8	Spacer	19803	10RSK	Handle Screw Cap
3561	10MT4	Screw	18450	10SN9	Screw	19857	10SAN	Bail Spring Guide
6008	10PN2	Set Screw	18455	10DT7	Screw	19926	1076N	Nut Lock Plate
6920	107JT	Washer	18465	10EF0	Screw	19976	1009C	Bushing
8074	107F2	Bearing Water Proof	18711	10TJX	Drag Click Screw	20124	10J48	Washer
8165	10FJ6	Washer	18724	101D9	Spring Guide A Support Collar	20282	10DYJ	Idle Gear Shaft
8759	106UX	Click Pin	18726	10DKC	Bail Spring Guide A Bush	20436	100CW	Washer
9833	107V2	Ratchet Spring	18732	101D5	Rotor Ring	20636	10M2A	Screw
9909	10BCP	Eared Washer	18733	10DK7	Friction Ring	20720	10RHD	Pinion Gear
9910	10B9D	Key Washer A	18735	10S2L	Roller Clutch Assembly	20721	10RG8	Drive Gear
9912	10GEW	Bearing Retainer	18736	10DKD	Roller Clutch Case Seal	20722	10S53	Idle Gear (Large)
9931	10CGZ	Click Spring	18737	10DJY	Roller Clutch Inner	20735	10E66	Drag Washer A
9968	108W9	O Ring	18738	10DJZ	Bearing Retainer	20737	10E6E	Drag Washer B
11646	107PS	Drag Click Ratchet	18746	10DJK	Bail Trip Strike	20903	101WE	Ball Bearing
13241	104JD	Ball Bearing	18747	10DKA	Flange Water Proof	21441	10E8C	Drag Knob Assembly
13269	104VX	Ball Bearing	18758	10TK0	Washer	21455	10SC5	Bail Arm
13274	104PP	Ball Bearing	18762	10TJT	Washer	21456	10QY4	Bail Assembly
13317	10LAB	O Ring	18966	1006X	Retainer	21457	10R43	Rotor Assembly
13381	104JT	Ball Bearing	18977	10053	Washer	21458	10SC6	Body
14259	10G6C	Washer	18978	1006F	Oscillating Guide A	21460	10SN2	Rear Shield
14300	10LTS	Spool Bearing Bushing	18979	10074	Idle Gear	21461	10DSE	Handle Assembly
14780	10A6F	Screw	18988	1005H	Oscillating Slider Bushing	21462	10QY6	Handle Shank Assembly
15489	10BQE	Drag Click Spring	18991	1006E	Worm Shaft	21463	10QY5	Handle Knob Assembly
15718	1055G	Screw	18993	10SM7	Idle Gear (Small)	21468	10S1W	Spool Assembly
15727	10B2B	Handle Knob Seal	19029	101M1	Washer	21469	10R61	Side Cover Assembly
15992	1080X	Rotor Nut	19090	100YN	Screw			
16465	10PXU	Handle Shaft Seal	19139	10T1G	Screw			
16587	10QBY	Key Washer B	19140	10TGX	Screw			
16616	10HAH	Oscillating Pawl Cover	19143	101LH	Screw			
16618	106VM	Oscillating Pawl	19195	10GA7	Washer			
16838	103B3	Main Shaft Spacer Assembly	19224	1002S	Washer			
17467	10R2P	Bail Spring	19351	10RJK	Main Shaft Assembly			
17468	10R2E	Bail Spring Guide B	19362	10DTR	Bail Hold Support Guard			
17522	106M8	Bushing	19365	10E0C	Bail Trip Lever			
17562	10ATC	Worm Shaft Retainer	19366	10DTJ	Rotor Brim			
17681	10TPC	Line Roller Support	19375	10132	Rear Protector			
17750	10TQH	Bearing Housing	19411	10E08	Handle Shaft Cover B			
17751	10EX8	Ball Bearing	19703	104JQ	Ball Bearing			
17752	10GHN	Washer	19744	100XZ	Washer			