SEDONA

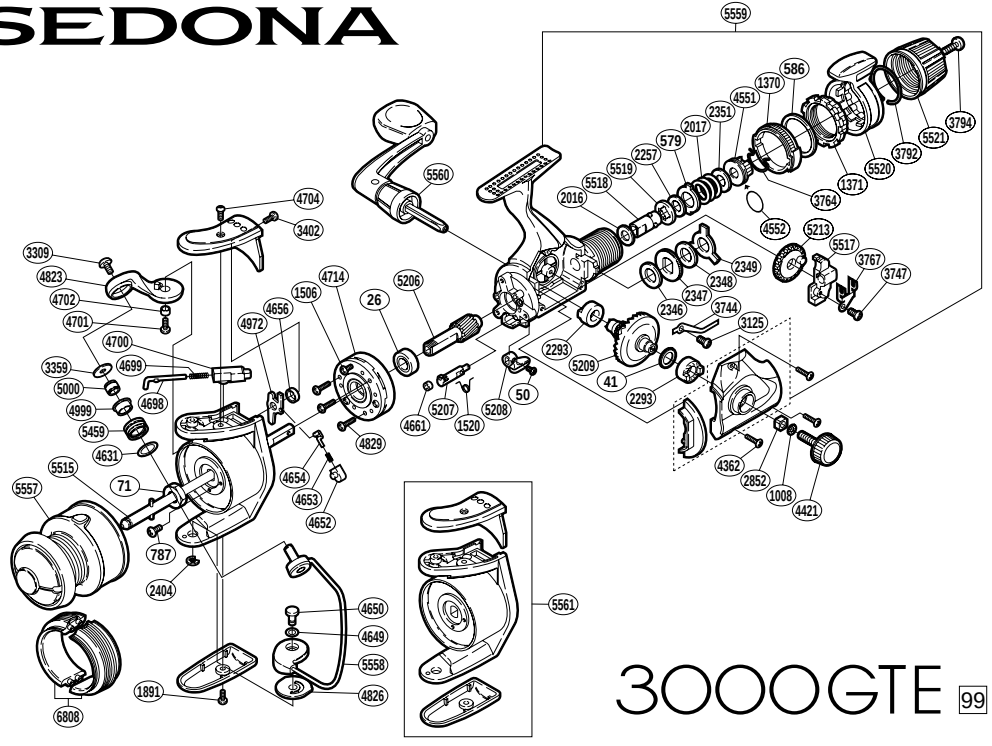

RD No.	PARTS NAMES	RD No.	PARTS NAMES	RD No.	PARTS NAMES
0026	Ball Bearing	3359	Line Roller Washer	4714	Roller Clutch Assembly
0041	Drive Gear Washer	3402	Bail Spring Cover Screw (small)	4823	Bail Arm
0050	Anti-Reverse Lever Screw	3744	Drag Click	4826	Bail Hold Support Spacer
0071	Rotor Nut	3747	Slider Retainer Screw	4829	Roller Clutch Screw
0579	Eared Washer “B”	3764	Hold Click Spring	4972	Bail Trip Lever
0586	Fightin’ Pressure Screw Washer	3767	Oscillating Slider Retainer	4999	Line Roller Bushing
0787	Nut Lock Screw	3792	Lever Hold Spring	5000	Line Roller Collar
1008	Handle Lock Washer	3794	Drag Programmer Screw	5206	Pinion Gear
1370	Lever Click Gear	4362	Side Cover Screw	5207	Anti-Reverse Cam
1371	Fightin’ Pressure Screw	4421	Handle Screw Cap	5208	Anti-Reverse Lever
1506	Clutch Cover Screw	4551	Pressure Screw	5209	Drive Gear
1520	Anti-Reverse Cam Spring	4552	“O” Ring	5213	Oscillating Gear
1891	Bail Hold Support Guard Screw	4631	Spacer	5459	Line Roller
2016	Drag Washer “H” (cloth)	4649	Spacer	5515	Main Shaft
2017	Drag Coil Spring	4650	Bail Hold Support Shaft	5517	Oscillating Slider
2257	Drag Washer “H” (blue)	4652	Lever Spring Guide (B)	5518	Drag Shaft (A)
2293	Drive Gear Bushing	4653	Lever Spring	5519	Drag Shaft (B)
2346	Drag Washer “C” (cloth)	4654	Lever Spring Guide (A)	5520	Fightin’ Drag Lever
2347	Click Gear	4656	Trip Lever Spacer	5521	Drag Programmer
2348	Drag Washer “C” (blue)	4661	Anti-Reverse Cam Ring	5557	Spool Assembly
2349	Eared Washer “B”	4698	Bail Spring Guide (A)	5558	Bail Assembly
2351	Drag Spring Washer	4699	Bail Spring	5559	Body Assembly
2404	“E” Lock	4700	Bail Spring Guide (B)	5560	Handle Assembly
2852	Handle Screw Lock	4701	Bail Arm Screw	5561	Rotor Assembly
3125	Drag Click Screw	4702	Bail Arm Bushing	6808	Pair of Spool Economizers
3309	Line Roller Screw	4704	Bail Spring Cover Screw (large)		

(111202)

3000GTE