SHIMANO

STRADIC CI4+ SA-RB

STCI4+2500FA

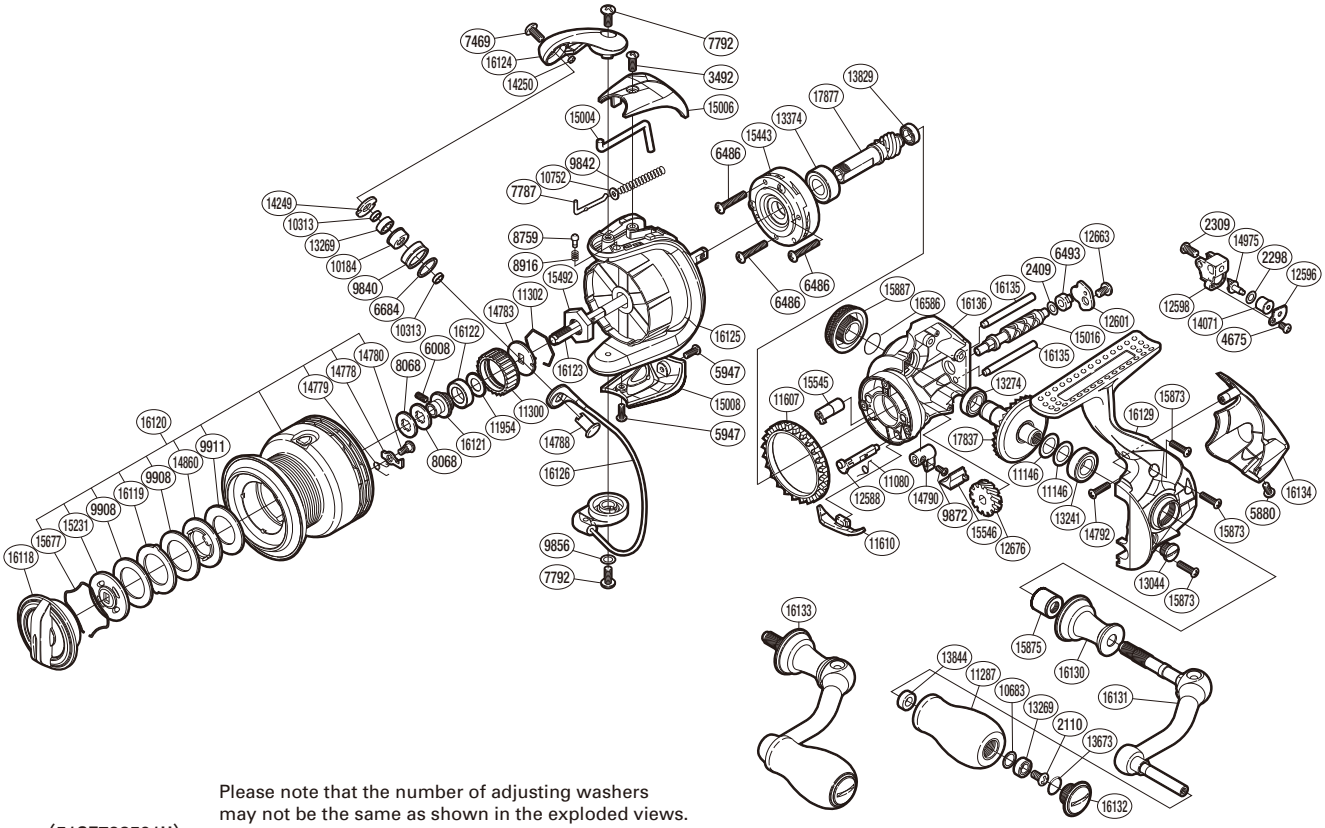

(51SE792501U)

Please note that the number of adjusting washers may not be the same as shown in the exploded views. (Adjustment will vary with each individual product.)

Part No.	Description	Part No.	Description	Part No.	Description
RD 2110	Screw	RD11607	Friction Ring	RD15231	Key Washer
RD 2298	Spacer ***	RD11610	Bail Trip Strike	RD15443	Roller Clutch Assembly
RD 2309	Screw	RD11954	Washer	RD15492	Rotor Nut
RD 2409	Spacer ***	RD12588	Anti-Reverse Cam	RD15545	Worm Bushing (front) ***
RD 3492	Screw	RD12596	Oscillating Pawl Cover	RD15546	Anti-Reverse Lever Cover
RD 4675	Screw	RD12598	Oscillating Slider	RD15677	Drag Washers Retainer
RD 5880	Screw	RD12601	Worm Shaft Retainer	RD15873	Screw
RD 5947	Screw	RD12663	Screw	RD15875	Handle Shaft Cover B
RD 6008	Set Screw	RD12676	Idle Gear **	RD15887	Handle Screw Cap
RD 6486	Screw	RD13044	Oil Cap	RD16118	Drag Knob
RD 6493	Worm Bushing (rear) ***	RD13241	Ball Bearing *****	RD16119	Eared Washer
RD 6684	Line Roller Spacer *	RD13269	Ball Bearing *	RD16120	Spool Assembly
RD 7469	Screw *	RD13274	Ball Bearing *****	RD16121	Bearing Bushing
RD 7787	Bail Spring Guide A	RD13374	Ball Bearing *****	RD16122	Spool Bushing
RD 7792	Screw	RD13673	O Ring	RD16123	Main Shaft
RD 8068	Spool Washer	RD13829	Ball Bearing *****	RD16124	Bail Arm
RD 8759	Click Pin	RD13844	Handle Knob Bushing	RD16125	Rotor
RD 8916	Click Spring	RD14071	Oscillating Slider Bushing ***	RD16126	Bail Assembly
RD 9840	Line Roller *	RD14249	Line Roller Plate *	RD16129	Side Cover
RD 9842	Bail Spring	RD14250	Line Roller Oil Cap	RD16130	Handle Shaft Cover
RD 9856	Washer	RD14778	Drag Click	RD16131	Handle Shank Assembly
RD 9872	Screw	RD14779	Drag Click Spring	RD16132	Handle Knob Seal
RD 9908	Drag Washer	RD14780	Screw	RD16133	Handle Assembly
RD 9911	Drag Washer	RD14783	Spool Support	RD16134	Rear Protector
RD10184	Line Roller Bushing *	RD14788	Line Roller Support *	RD16135	Oscillating Guide
RD10313	Bearing Spacer *	RD14790	Anti-Reverse Lever	RD16136	Body
RD10683	Washer	RD14792	Screw	RD16586	O Ring
RD10752	Bail Spring Guide A Support	RD14860	Key Washer	RD17837	Drive Gear **
RD11080	Anti-Reverse Cam Spring	RD14975	Oscillating Pawl ***	RD17877	Pinion Gear **
RD11146	Washer **/*****	RD15004	Bail Trip Lever	PK 0072	Line Roller Set *
RD11287	Handle Knob	RD15006	Bail Spring Cover	PK 0396	Gear Set **
RD11300	Drag Click Ratchet	RD15008	Bail Hold Support Guard	PK 0380	Oscillation Set ***
RD11302	Ratchet Spring	RD15016	Worm Shaft ***	PK 0081	Bearing Set *****