SHIMANO

STELLA S A-RB

STL-3000FD

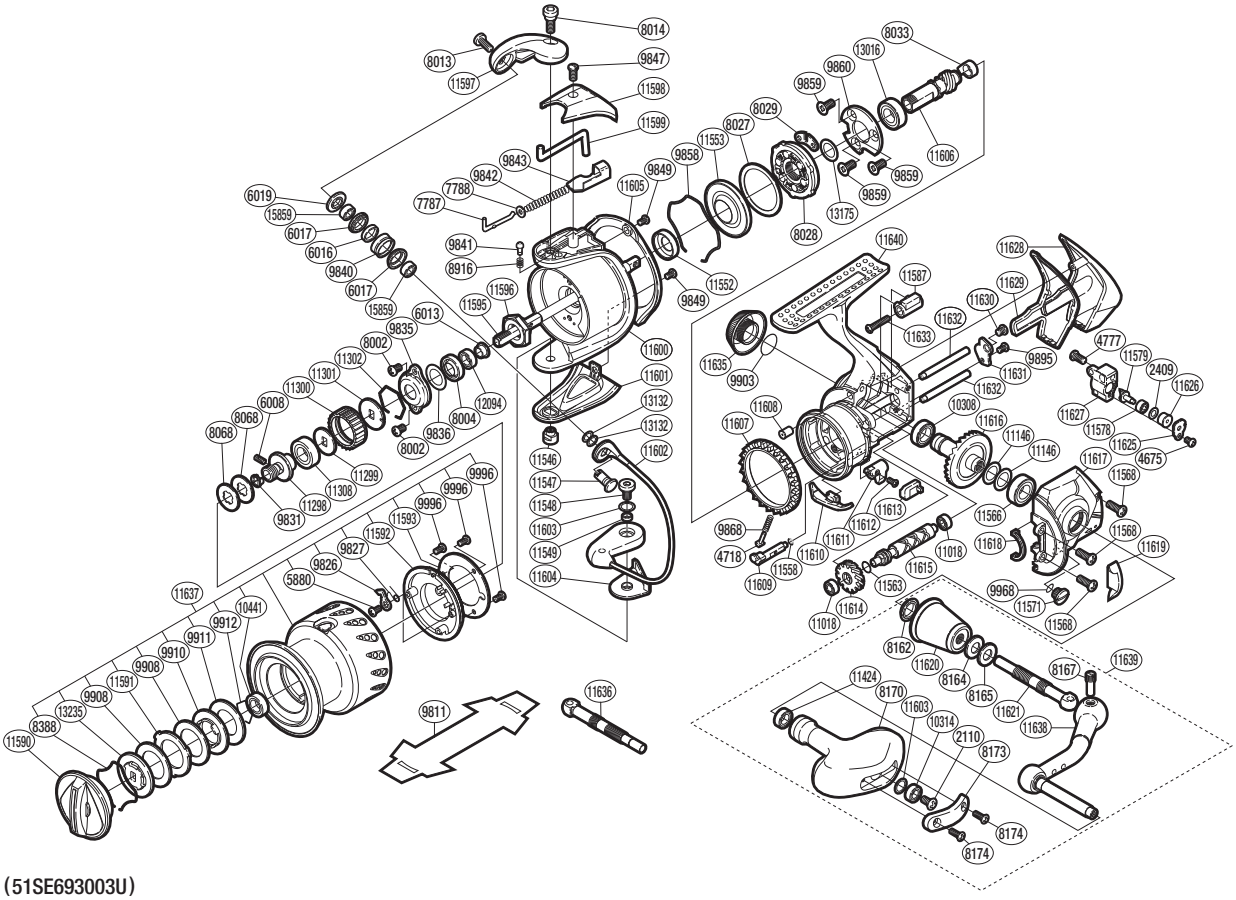

(51SE693003U)

Part No.	Description		Part No.	Description		Part No.	Description
RD 2110	Screw		RD 9868	Anti-Reverse Cam Spring		RD11602	Bail Assembly
RD 2409	Spacer		RD 9895	Screw		RD11603	Washer
RD 4675	Screw		RD 9903	O Ring		RD11604	Bail Hold Support Spacer
RD 4718	Lever Spring Guide A		RD 9908	Drag Washer		RD11605	Rotor Guard
RD 4777	Screw		RD 9910	Key Washer		RD11606	Pinion Gear
RD 5880	Screw		RD 9911	Drag Washer		RD11607	Friction Ring
RD 6008	Set Screw		RD 9912	Bearing Retainer		RD11608	Body Flange Seal
RD 6013	Main Shaft Spacer		RD 9968	O Ring		RD11609	Anti-Reverse Cam
RD 6016	Bearing Spacer		RD 9996	Screw		RD11610	Bail Trip Strike
RD 6017	Line Roller Bushing		RD10308	Ball Bearing		RD11611	Anti-Reverse Lever
RD 6019	Line Roller Plate		RD10314	Ball Bearing		RD11612	Screw
RD 7787	Bail Spring Guide A		RD10441	Ball Bearing		RD11613	Anti-Reverse Lever Cover
RD 7788	Spring Guide A Support		RD11018	Ball Bearing		RD11614	Idle Gear
RD 8002	Screw		RD11146	Washer		RD11615	Worm Shaft
RD 8004	Bearing Water Proof		RD11298	Bearing Bushing		RD11616	Drive Gear
RD 8013	Screw		RD11299	Washer		RD11617	Side Cover
RD 8014	Screw		RD11300	Drag Click Ratchet		RD11618	Flange Water Proof
RD 8027	Roller Clutch Outer Spacer		RD11301	Spool Support		RD11619	Friction Ring Spacer
RD 8028	Roller Clutch Assembly		RD11302	Ratchet Spring		RD11620	Handle Shaft Cover
RD 8029	Clutch Insole		RD11424	Ball Bearing		RD11621	Handle Shaft (left)
RD 8033	Bushing		RD11546	Bail Hold Support Shaft		RD11625	Oscillating Pawl Cover
RD 8068	Spool Washer		RD11547	Line Roller Support		RD11626	Oscillating Slider Bushing
RD 8162	Handle Shaft Seal		RD11548	Screw		RD11627	Oscillating Slider
RD 8164	Coned Disc Spring		RD11549	Screw Collar		RD11628	Rear Protector
RD 8165	Large Handle Shank Washer		RD11552	Rotor Ring		RD11629	Rear Shield
RD 8167	Handle Shaft Screw		RD11553	Roller Clutch Water Proof		RD11630	Screw
RD 8170	Handle Knob		RD11558	O Ring		RD11631	Worm Shaft Retainer
RD 8173	Handle Knob I.D. Plate		RD11563	Worm Shaft Ring		RD11632	Oscillating Guide
RD 8174	Screw		RD11566	Ball Bearing		RD11633	Screw
RD 8388	Drag Washers Retainer		RD11568	Screw		RD11635	Handle Screw Cap
RD 8916	Click Spring		RD11571	Oil Cap		RD11637	Spool Assembly
RD 9826	Drag Click		RD11578	Ball Bearing		RD11638	Handle Shank Assembly
RD 9827	Drag Click Spring		RD11579	Oscillating Pawl		RD11639	Handle Assembly
RD 9831	Bearing Bushing Spacer		RD11587	Rear Protector Collar		RD11640	Body
RD 9835	Rotor Nut Lock Plate		RD11590	Drag Knob		RD12094	Ball Bearing
RD 9836	Washer		RD11591	Eared Washer		RD13016	Ball Bearing
RD 9840	Line Roller		RD11592	Spool Pin Cover		RD13132	Washer
RD 9841	Click Pin		RD11593	Spool Pin Cover Plate		RD13175	Washer
RD 9842	Bail Spring		RD11595	Main Shaft		RD13235	Key Washer
RD 9843	Bail Spring Seat		RD11596	Rotor Nut		RD15859	Ball Bearing
RD 9847	Screw		RD11597	Bail Arm			
RD 9849	Screw		RD11598	Bail Spring Cover			
RD 9858	Roller Clutch Water Proof Retainer		RD11599	Bail Trip Lever			
RD 9859	Screw		RD11600	Rotor		RD 9811	Reel Seat Spacer (accessory)
RD 9860	Bearing Retainer		RD11601	Bail Hold Support Guard		RD11636	Handle Shaft (right) (accessory)