SHIMANO

Vanquish A-RB

VANQ-C3000HG

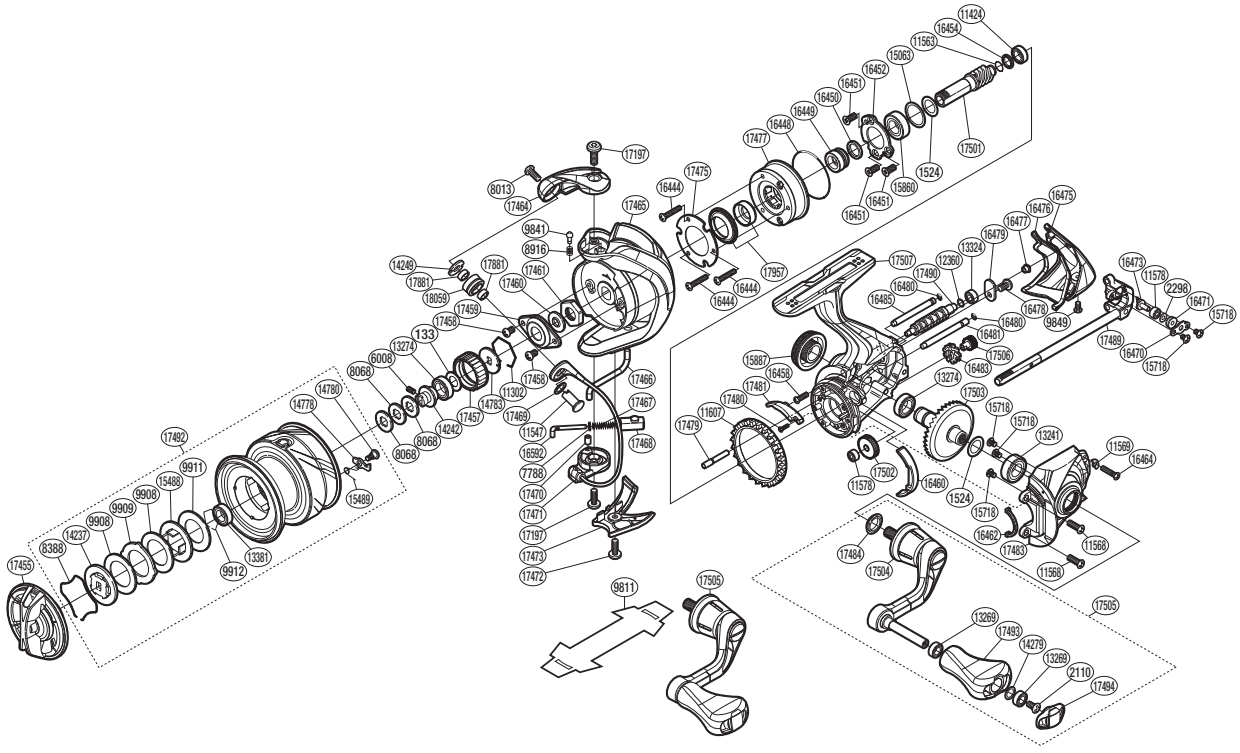

Please note that the number of adjusting washers may not be the same as shown in the exploded views. (Adjustment will vary with each individual product.)

(51SH343401X)

Part No.	Description	Part No.	Description	Part No.	Description
RD 0133	Anti-Reverse Pawl Spacer	RD15488	Key Washer	RD17466	Bail Trip Lever
RD 1524	Washer */**	RD15489	Drag Click Spring	RD17467	Bail Spring
RD 2110	Screw	RD15718	Screw **	RD17468	Bail Spring Seat
RD 2298	Spacer ***	RD15860	Ball Bearing **	RD17469	Washer ****
RD 6008	Set Screw	RD15887	Handle Screw Cap	RD17470	Bail Spring Guide A Bush
RD 7788	Spring Guide A Support	RD16444	Screw	RD17471	Bail Assembly
RD 8013	Screw ****	RD16448	O Ring	RD17472	Screw
RD 8068	Spool Washer	RD16449	Roller Clutch Inner	RD17473	Bail Hold Support Guard
RD 8388	Drag Washers Retainer	RD16450	Roller Clutch Inner Spacer	RD17475	Roller Clutch Reinforce
RD 8916	Click Spring	RD16451	Screw	RD17477	Roller Clutch Assembly
RD 9841	Click Pin	RD16452	Bearing Retainer	RD17479	Idle Gear B Shaft
RD 9849	Screw	RD16454	Pinion Gear Spacer **	RD17480	Screw
RD 9908	Drag Washer	RD16458	Screw	RD17481	Bail Trip Strike
RD 9909	Eared Washer	RD16460	Friction Ring Spacer	RD17483	Side Cover
RD 9911	Drag Washer	RD16462	Flange Water Proof	RD17484	Handle Shaft Seal
RD 9912	Bearing Retainer	RD16464	Screw	RD17489	Main Shaft Assembly
RD11302	Ratchet Spring	RD16470	Oscillating Pawl Cover	RD17490	Worm Shaft ***
RD11424	Ball Bearing **	RD16471	Oscillating Slider Bushing ***	RD17492	Spool Assembly
RD11547	Line Roller Support ****	RD16473	Oscillating Pawl ***	RD17493	Handle Knob
RD11563	Worm Shaft Ring **	RD16475	Rear Protector	RD17494	Handle Knob Seal
RD11568	Screw	RD16476	Rear Shield	RD17501	Pinion Gear *
RD11569	Screw Washer	RD16477	Rear Protector Collar	RD17502	Idle Gear *
RD11578	Ball Bearing ***	RD16478	Screw	RD17503	Drive Gear *
RD11607	Friction Ring	RD16479	Worm Shaft Retainer	RD17504	Handle Shank Assembly
RD12360	Washer ***	RD16480	O Ring	RD17505	Handle Assembly
RD13241	Ball Bearing **	RD16481	Oscillating Guide B	RD17506	Idle Gear B S *
RD13269	Ball Bearing	RD16483	Idle Gear B L *	RD17507	Body
RD13274	Ball Bearing **	RD16485	Oscillating Guide A	RD17881	Bearing Spacer ****
RD13324	Worm Bushing ***	RD16592	Bail Spring Guide A	RD17957	Roller Clutch Water Proof Set
RD13381	Ball Bearing	RD17197	Screw	RD18059	Line Roller(With Bearing) ****
RD14237	Key Washer	RD17455	Drag Knob		
RD14242	Bearing Bushing	RD17457	Drag Click Ratchet	RD 9811	Reel Seat Spacer (accessory)
RD14249	Line Roller Plate ****	RD17458	Screw		
RD14279	Washer	RD17459	Rotor Nut Lock Plate		
RD14778	Drag Click	RD17460	Bearing Water Proof	PK 0342	Gear Set *
RD14780	Screw	RD17461	Rotor Nut	PK 0406	Bearing Set **
RD14783	Spool Support	RD17464	Bail Arm	PK 0340	Oscillation Set ***
RD15063	Spacer	RD17465	Rotor	PK 0411	Line Roller Set ****