SHIMANO

STRADIC A-RB

ST-4000XGFK

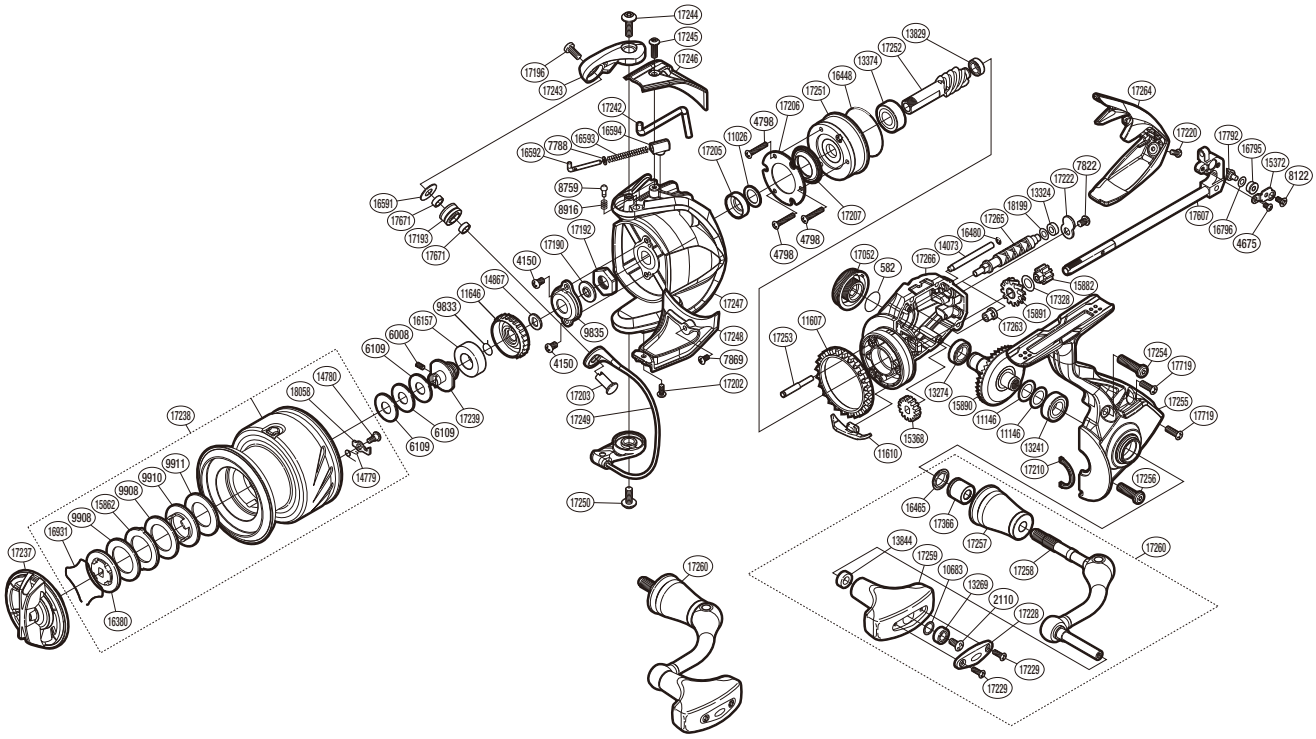

(51SE454011U)

Please note that the number of adjusting washers may not be the same as shown in the exploded views. (Adjustment will vary with each individual product.)

Part No.	Description	Part No.	Description	Part No.	Description
RD 0582	O Ring	RD15368	Idle Gear *	RD17243	Bail Arm
RD 2110	Screw	RD15372	Oscillating Pawl Cover	RD17245	Screw
RD 4150	Screw	RD15862	Eared Washer	RD17246	Bail Spring Cover
RD 4675	Screw	RD15882	Idle Gear B (Small) *	RD17247	Rotor
RD 4798	Screw	RD15890	Drive Gear *	RD17248	Bail Hold Support Guard
RD 5947	Screw	RD15891	Idle Gear B (Large) *	RD17249	Bail Assembly
RD 6008	Set Screw	RD16157	Spool Bushing	RD17250	Screw
RD 6109	Spool Washer	RD16380	Key Washer	RD17251	Roller Clutch Assembly
RD 7788	Spring Guide (A) Support	RD16448	O Ring	RD17252	Pinion Gear *
RD 7822	Screw	RD16465	Handle Shaft Seal	RD17253	Idle Gear B Shaft
RD 7869	Screw	RD16480	O Ring	RD17254	Screw
RD 8122	Screw	RD16591	Line Roller Plate ****	RD17255	Side Cover
RD 8759	Click Pin	RD16592	Bail Spring Guide A	RD17256	Screw
RD 8916	Click Spring	RD16593	Bail Spring	RD17257	Handle Shaft Cover
RD 9833	Ratchet Spring	RD16594	Bail Spring Seat	RD17258	Handle Shank Assembly
RD 9835	Rotor Nut Lock Plate	RD16795	Oscillating Slider Bushing ***	RD17259	Handle Knob
RD 9908	Drag Washer	RD16796	Spacer ***	RD17260	Handle Assembly
RD 9910	Key Washer	RD16931	Drag Washers Retainer	RD17263	Worm Bushing (Front) ***
RD 9911	Drag Washer	RD17052	Handle Screw Cap	RD17264	Rear Protector
RD10683	Washer	RD17190	Bearing Water Proof	RD17265	Worm Shaft ***
RD11026	Washer	RD17192	Rotor Nut	RD17266	Body
RD11146	Washer */**	RD17193	Line Roller ****	RD17269	Screw
RD11607	Friction Ring	RD17196	Screw ****	RD17328	Washer *
RD11610	Bail Trip Strike	RD17202	Screw	RD17366	Handle Shaft Cover B
RD11646	Drag Click Ratchet	RD17203	Line Roller Support ****	RD17607	Main Shaft Assembly
RD13241	Ball Bearing **	RD17205	Rotor Ring	RD17671	Bearing Spacer ****
RD13269	Ball Bearing	RD17206	Roller Clutch Reinforce	RD17719	Screw
RD13274	Ball Bearing **	RD17207	Roller Clutch Water Proof	RD17792	Oscillating Pawl ***
RD13324	Worm Bushing ***	RD17210	Flange Water Proof	RD18058	Drag Click
RD13374	Ball Bearing **	RD17220	Screw	RD18199	Washer ***
RD13829	Ball Bearing **	RD17222	Worm Shaft Retainer		
RD13844	Handle Knob Bushing	RD17228	Handle Knob I.D. Plate		
RD14073	Oscillating Guide	RD17237	Drag Knob	PK 0335	Gear Set *
RD14779	Drag Click Spring	RD17238	Spool Assembly	PK 0081	Bearing Set **
RD14780	Screw	RD17239	Bearing Bushing	PK 0434	Oscillation Set ***
RD14867	Spool Support	RD17242	Bail Trip Lever	PK 0397	Line Roller Set ****