SHIMANO

STRADIC S A-RB

ST-2500HGFK

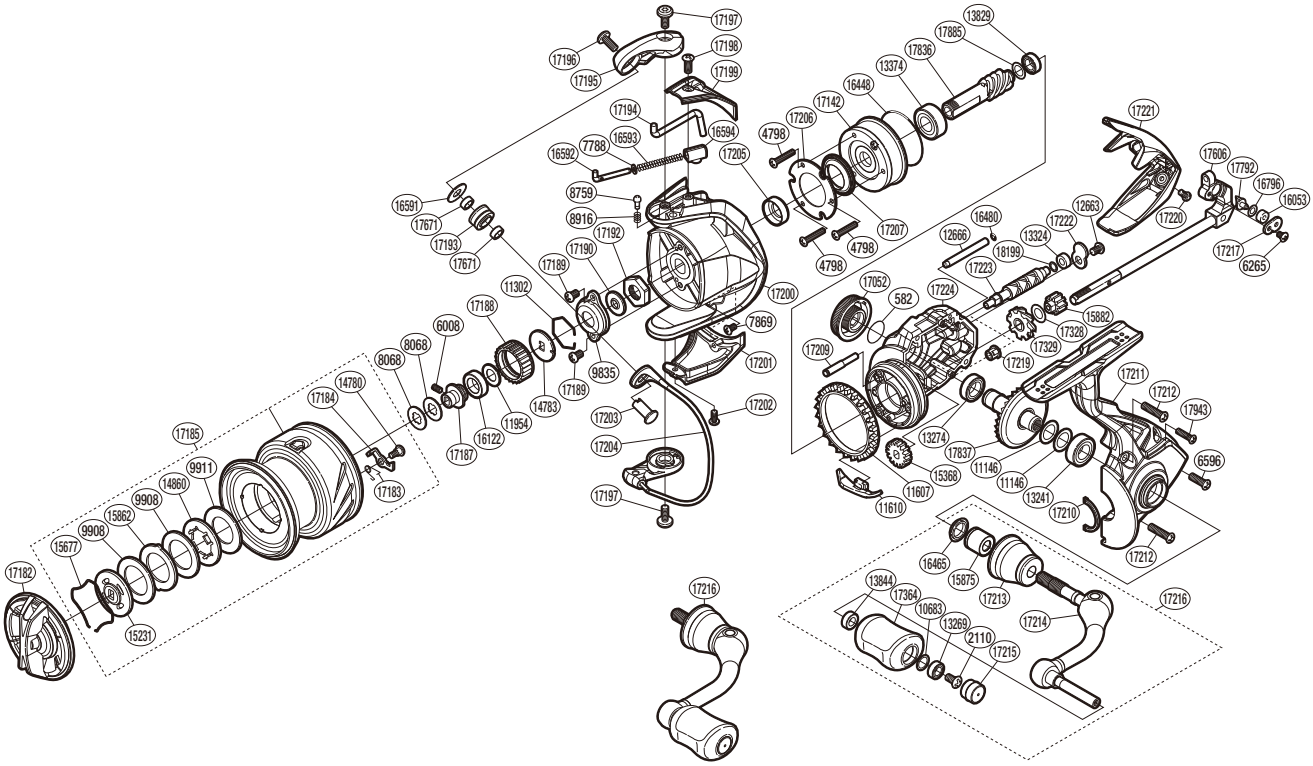

(51SE452511U)

Please note that the number of adjusting washers may not be the same as shown in the exploded views. (Adjustment will vary with each individual product.)

Part No.	Description	Part No.	Description	Part No.	Description
RD 0582	O Ring	RD15862	Eared Washer	RD17204	Bail Assembly
RD 2110	Screw	RD15875	Handle Shaft Cover B	RD17205	Rotor Ring
RD 4798	Screw	RD15882	Idle Gear B (Small) *	RD17206	Roller Clutch Reinforce
RD 6008	Set Screw	RD16053	Oscillating Slider Bushing ***	RD17207	Roller Clutch Water Proof
RD 6265	Screw	RD16122	Spool Bushing	RD17209	Idle Gear B Shaft
RD 6596	Screw	RD16448	O Ring	RD17210	Flange Water Proof
RD 7788	Spring Guide (A) Support	RD16465	Handle Shaft Seal	RD17211	Side Cover
RD 7869	Screw	RD16480	O Ring	RD17212	Screw
RD 8068	Spool Washer	RD16591	Line Roller Plate ****	RD17213	Handle Shaft Cover
RD 8759	Click Pin	RD16592	Bail Spring Guide A	RD17214	Handle Shank Assembly
RD 8916	Click Spring	RD16593	Bail Spring	RD17215	Handle Knob Seal
RD 9835	Rotor Nut Lock Plate	RD16594	Bail Spring Seat	RD17216	Handle Assembly
RD 9908	Drag Washer	RD16796	Spacer ***	RD17217	Oscillating Pawl Cover
RD 9911	Drag Washer	RD17052	Handle Screw Cap	RD17219	Worm Bushing (Front) ***
RD10683	Washer	RD17142	Roller Clutch Assembly	RD17220	Screw
RD11146	Washer */**	RD17182	Drag Knob	RD17221	Rear Protector
RD11302	Ratchet Spring	RD17183	Drag Click Spring	RD17222	Worm Shaft Retainer
RD11607	Friction Ring	RD17184	Drag Click	RD17223	Worm Shaft ***
RD11610	Bail Trip Strike	RD17185	Spool Assembly	RD17224	Body
RD11954	Washer	RD17187	Bearing Bushing	RD17328	Washer *
RD12663	Screw	RD17188	Drag Click Ratchet	RD17329	Idle Gear B (Large) *
RD12666	Oscillating Guide A	RD17189	Screw	RD17364	Handle Knob
RD13241	Ball Bearing **	RD17190	Bearing Water Proof	RD17606	Main Shaft Assembly
RD13269	Ball Bearing	RD17192	Rotor Nut	RD17671	Bearing Spacer ****
RD13274	Ball Bearing **	RD17193	Line Roller ****	RD17792	Oscillating Pawl ***
RD13324	Worm Bushing ***	RD17194	Bail Trip Lever	RD17836	Pinion Gear *
RD13374	Ball Bearing **	RD17195	Bail Arm	RD17837	Drive Gear *
RD13829	Ball Bearing **	RD17196	Screw ****	RD17885	Washer
RD13844	Handle Knob Bushing	RD17197	Screw	RD17943	Screw
RD14780	Screw	RD17198	Screw	RD18199	Washer ***
RD14783	Spool Support	RD17199	Bail Spring Cover		
RD14860	Key Washer	RD17200	Rotor	PK 0398	Gear Set *
RD15231	Key Washer	RD17201	Bail Hold Support Guard	PK 0081	Bearing Set **
RD15368	Idle Gear *	RD17202	Screw	PK 0416	Oscillation Set ***
RD15677	Drag Washers Retainer	RD17203	Line Roller Support ****	PK 0397	Line Roller Set ****