SHIMANO

SYMETRE

SY-2500FL

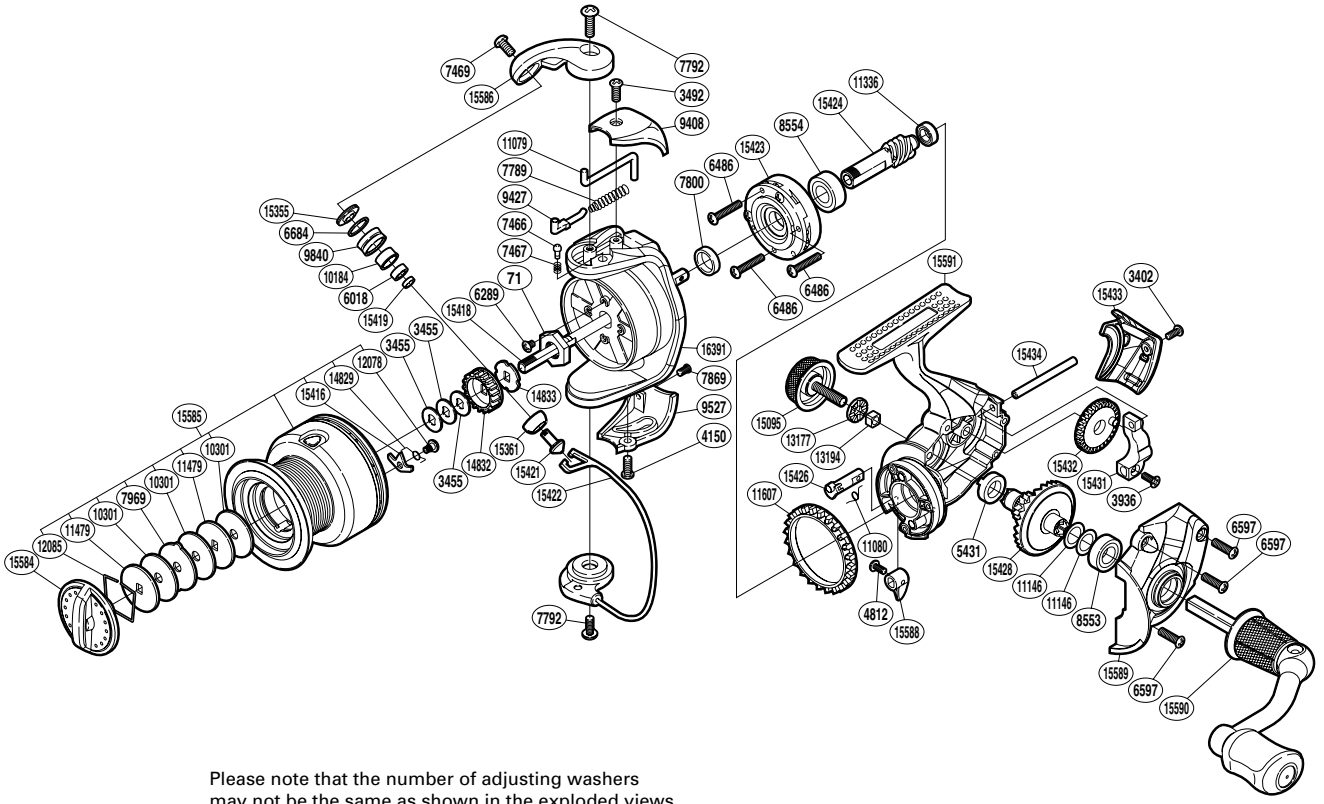

(1SE46250AU)

Please note that the number of adjusting washers may not be the same as shown in the exploded views. (Adjustment will vary with each individual product.)

Part No.	Description	Part No.	Description	Part No.	Description
RD 0071	Rotor Nut	RD 8554	Ball Bearing	RD15361	Line Roller Support Cover
RD 3402	Screw	RD 9408	Bail Spring Cover	RD15416	Drag Click
RD 3455	Spool Washer	RD 9427	Bail Spring Guide	RD15418	Main Shaft
RD 3492	Screw	RD 9527	Bail Hold Support Guard	RD15419	Bearing Spacer
RD 3936	Screw	RD 9840	Line Roller	RD15421	Line Roller Support
RD 4150	Screw	RD10184	Line Roller Bushing	RD15422	Bail Assembly
RD 4812	Screw	RD10301	Drag Washer	RD15423	Roller Clutch Assembly
RD 5431	Drive Gear Bushing	RD11079	Bail Trip Lever	RD15424	Pinion Gear
RD 6018	Ball Bearing	RD11080	Anti-Reverse Cam Spring	RD15426	Anti-Reverse Cam
RD 6289	Screw	RD11146	Washer	RD15428	Drive Gear
RD 6486	Screw	RD11336	Ball Bearing	RD15431	Oscillating Slider
RD 6597	Screw	RD11479	Key Washer	RD15432	Oscillating Gear
RD 6684	Line Roller Spacer	RD11607	Friction Ring	RD15433	Rear Protector
RD 7466	Click Pin	RD12078	Screw	RD15434	Oscillating Guide
RD 7467	Click Spring	RD12085	Drag Washers Retainer	RD15584	Drag Knob
RD 7469	Screw	RD13177	Handle Screw Cap Spacer	RD15585	Spool Assembly
RD 7789	Bail Spring	RD13194	Handle Screw Lock	RD15586	Bail Arm
RD 7792	Screw	RD14829	Drag Click Spring	RD15588	Anti-Reverse Lever
RD 7800	Rotor Ring	RD14832	Spool Support A	RD15589	Side Cover
RD 7869	Screw	RD14833	Spool Support B	RD15590	Handle Assembly
RD 7969	Eared Washer	RD15095	Handle Screw Cap	RD15591	Body
RD 8553	Ball Bearing	RD15355	Line Roller Washer	RD16391	Rotor