SHIMANO

STELLA SA-RB

STL-3000FE

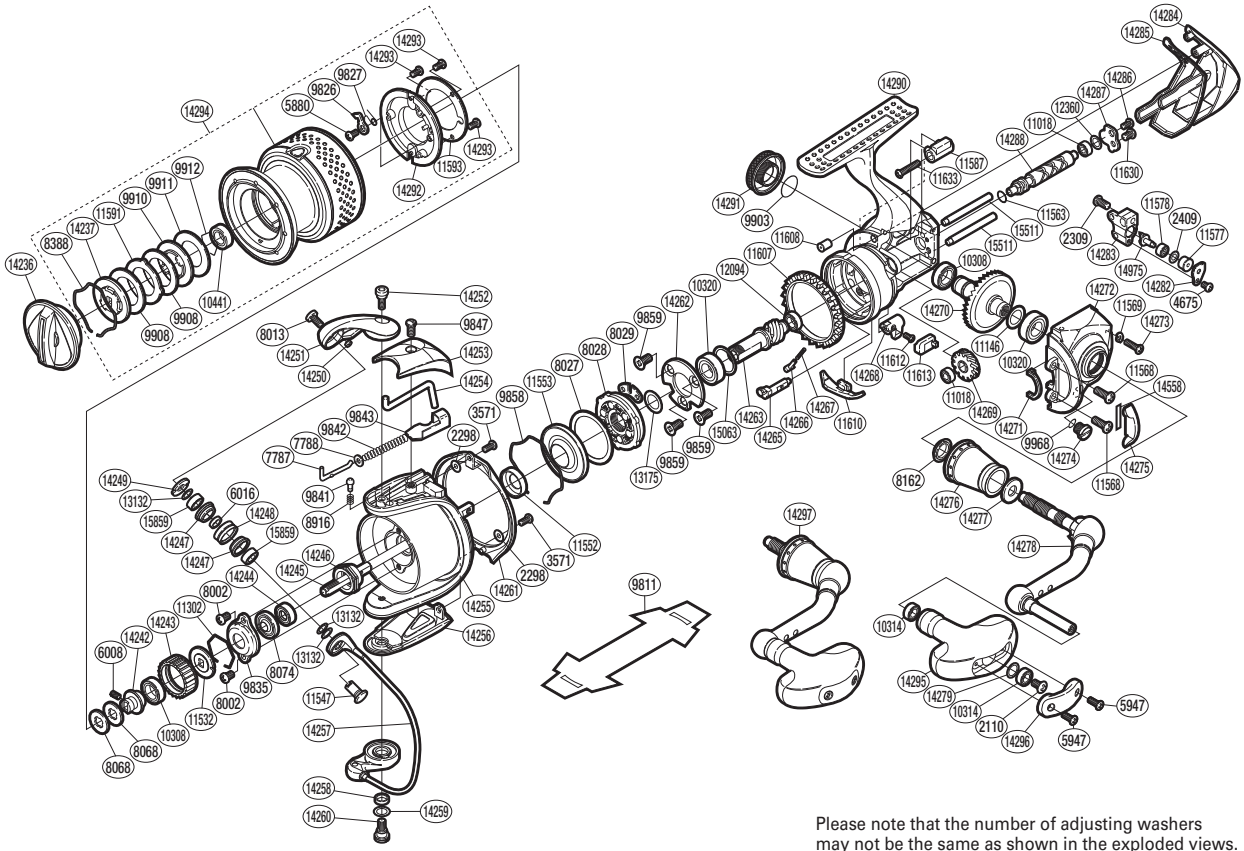

(51SE693004U)

Please note that the number of adjusting washers may not be the same as shown in the exploded views. (Adjustment will vary with each individual product.)

Part No.	Description	Part No.	Description	Part No.	Description
RD 2110	Screw	RD11302	Ratchet Spring	RD14259	Washer
RD 2298	Spacer	RD11532	Spool Support	RD14260	Screw
RD 2309	Screw	RD11547	Line Roller Support	RD14261	Rotor Guard
RD 2409	Spacer	RD11552	Rotor Ring	RD14262	Bearing Retainer
RD 3571	Screw	RD11553	Roller Clutch Water Proof	RD14263	Pinion Gear
RD 4675	Screw	RD11563	Worm Shaft Ring	RD14265	Anti-Reverse Cam
RD 5880	Screw	RD11568	Screw	RD14266	Spring Guide
RD 5947	Screw	RD11569	Screw Washer	RD14267	Anti-Reverse Cam Spring
RD 6008	Set Screw	RD11577	Oscillating Slider Bushing	RD14268	Anti-Reverse Lever
RD 6016	Bearing Spacer	RD11578	Ball Bearing	RD14269	Idle Gear
RD 7787	Bail Spring Guide A	RD11587	Rear Protector Collar	RD14270	Drive Gear
RD 7788	Spring Guide A Support	RD11591	Eared Washer	RD14271	Flange Water Proof
RD 8002	Screw	RD11593	Spool Pin Cover Plate	RD14272	Side Cover
RD 8013	Screw	RD11607	Friction Ring	RD14273	Screw
RD 8027	Roller Clutch Outer Spacer	RD11608	Body Flange Seal	RD14274	Oil Cap
RD 8028	Roller Clutch Assembly	RD11610	Bail Trip Strike	RD14275	Friction Ring Spacer
RD 8029	Clutch Insole	RD11612	Screw	RD14276	Handle Shaft Cover
RD 8068	Spool Washer	RD11613	Anti-Reverse Lever Cover	RD14277	Large Handle Shank Washer
RD 8074	Bearing Water Proof	RD11630	Screw	RD14278	Handle Shank Assembly
RD 8162	Handle Shaft Seal	RD11633	Screw	RD14279	Washer
RD 8388	Drag Washers Retainer	RD12094	Ball Bearing	RD14282	Oscillating Pawl Cover
RD 8916	Click Spring	RD12360	Washer	RD14283	Oscillating Slider
RD 9826	Drag Click	RD13132	Washer	RD14284	Rear Protector
RD 9827	Drag Click Spring	RD13175	Washer	RD14285	Rear Shield
RD 9835	Rotor Nut Lock Plate	RD14236	Drag Knob	RD14286	Screw
RD 9841	Click Pin	RD14237	Key Washer	RD14287	Worm Shaft Retainer
RD 9842	Bail Spring	RD14242	Bearing Bushing	RD14288	Worm Shaft
RD 9843	Bail Spring Seat	RD14243	Drag Click Ratchet	RD14290	Body
RD 9847	Screw	RD14244	Main Shaft Spacer	RD14291	Handle Screw Cap
RD 9858	Roller Clutch Water Proof Retainer	RD14245	Main Shaft	RD14292	Spool Pin Cover
RD 9859	Screw	RD14246	Rotor Nut	RD14293	Screw
RD 9903	O Ring	RD14247	Line Roller Bushing	RD14294	Spool Assembly
RD 9908	Drag Washer	RD14248	Line Roller	RD14295	Handle Knob
RD 9910	Key Washer	RD14249	Line Roller Plate	RD14296	Handle Knob I.D. Plate
RD 9911	Drag Washer	RD14250	Line Roller Oil Cap	RD14297	Handle Assembly
RD 9912	Bearing Retainer	RD14251	Bail Arm	RD14975	Oscillating Pawl
RD 9968	O Ring	RD14252	Screw	RD14558	Friction Ring Spacer Sheet (adjustment)
RD10308	Ball Bearing	RD14253	Bail Spring Cover	RD15063	Spacer
RD10314	Ball Bearing	RD14254	Bail Trip Lever	RD15511	Oscillating Guide
RD10320	Ball Bearing	RD14255	Rotor	RD15859	Ball Bearing
RD10441	Ball Bearing	RD14256	Bail Hold Support Guard		
RD11018	Ball Bearing	RD14257	Bail Assembly		
RD11146	Washer	RD14258	Bail Trip Cam Bushing	RD 9811	Reel Seat Spacer (accessory)