SHIMANO®

STELLA A-RB

STL-4000FB

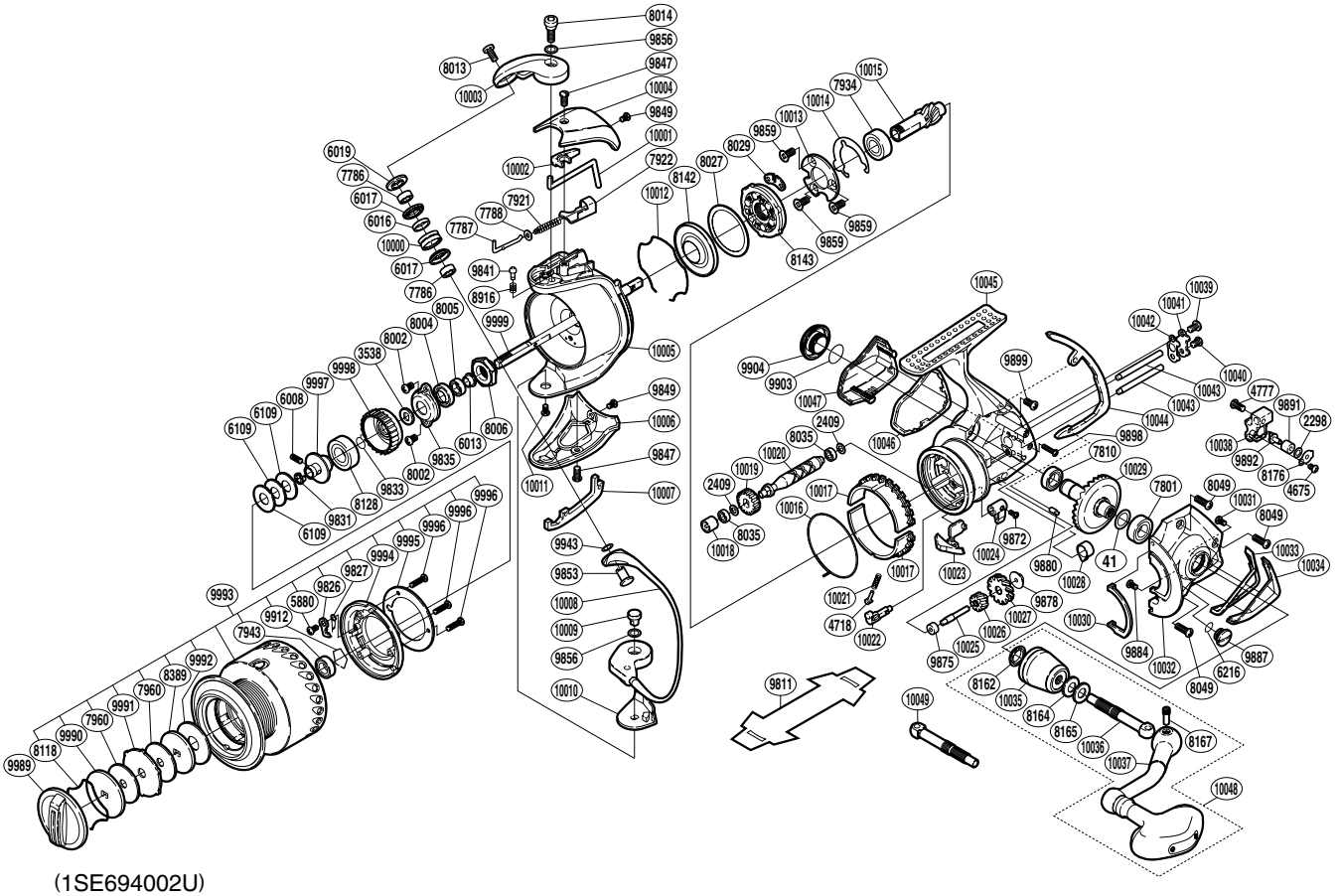

(1SE694002U)

Part No.	Description	Part No.	Description	Part No.	Description
RD 0041	Washer	RD 8916	Click Spring	RD10008	Bail Assembly
RD 2298	Spacer	RD 9826	Drag Click	RD10009	Bail Hold Support Shaft
RD 2409	Spacer	RD 9827	Drag Click Spring	RD10010	Bail Hold Support Spacer
RD 3538	Spool Support	RD 9831	Bearing Bushing Spacer	RD10011	Screw
RD 4675	Screw	RD 9833	Ratchet Spring	RD10012	Roller Clutch Water Proof Retainer
RD 4718	Lever Spring Guide A	RD 9835	Rotor Nut Lock Plate	RD10013	Bearing Retainer
RD 4777	Screw	RD 9841	Click Pin	RD10014	Bearing Retainer Sheet
RD 5880	Screw	RD 9847	Screw	RD10015	Pinion Gear
RD 6008	Set Screw	RD 9849	Screw	RD10016	Friction Spring
RD 6013	Main Shaft Spacer	RD 9853	Line Roller Support	RD10017	Friction Ring
RD 6016	Bearing Spacer	RD 9856	Washer	RD10018	Worm Bushing
RD 6017	Line Roller Bushing	RD 9859	Screw	RD10019	Idle Gear
RD 6019	Line Roller Washer	RD 9872	Screw	RD10020	Worm Shaft
RD 6109	Spool Washer	RD 9875	Idle Gear B Shaft Bushing	RD10021	Anti-Reverse Cam Spring
RD 6216	O Ring	RD 9878	Idle Gear B Shaft Bushing B	RD10022	Anti-Reverse Cam
RD 7786	Ball Bearing	RD 9880	Rear Protector B Pin	RD10023	Bail Trip Strike
RD 7787	Bail Spring Guide A	RD 9884	Screw	RD10024	Anti-Reverse Lever
RD 7788	Spring Guide A Support	RD 9887	Oil Cap	RD10025	Idle Gear B Shaft
RD 7801	Ball Bearing	RD 9891	Oscillating Slider Bushing	RD10026	Idle Gear B (small)
RD 7810	Ball Bearing	RD 9892	Oscillating Pawl	RD10027	Idle Gear B (large)
RD 7921	Bail Spring	RD 9898	Screw	RD10028	Bushing
RD 7922	Bail Spring Seat	RD 9899	Screw	RD10029	Drive Gear
RD 7934	Ball Bearing	RD 9903	O Ring	RD10030	Flange Water Proof
RD 7943	Ball Bearing	RD 9904	Handle Screw Cap	RD10031	Screw
RD 7960	Drag Washer A	RD 9912	Bearing Retainer	RD10032	Side Cover
RD 8002	Screw	RD 9943	Washer	RD10033	Cover (for side cover)
RD 8004	Bearing Water Proof	RD 9989	Drag Knob	RD10034	Side Cover Guard
RD 8005	Ball Bearing	RD 9990	Key Washer A	RD10035	Handle Shaft Cover
RD 8006	Rotor Nut	RD 9991	Eared Washer	RD10036	Handle Shaft (left)
RD 8013	Screw	RD 9992	Drag Washer B	RD10037	Handle
RD 8014	Screw	RD 9993	Spool Assembly	RD10038	Oscillating Slider
RD 8027	Roller Clutch Outer Spacer	RD 9994	Spool Pin Cover	RD10039	Screw
RD 8029	Clutch Insole	RD 9995	Spool Pin Cover Plate	RD10040	Screw
RD 8035	Ball Bearing	RD 9996	Screw	RD10041	Worm Shaft Retainer
RD 8049	Screw	RD 9997	Bearing Bushing	RD10042	Worm Shaft Retainer Washer
RD 8118	Drag Washers Retainer	RD 9998	Drag Click Ratchet	RD10043	Oscillating Guide
RD 8128	Ball Bearing	RD 9999	Main Shaft	RD10044	Rear Protector B
RD 8142	Roller Clutch Water Proof	RD10000	Line Roller	RD10045	Body
RD 8143	Roller Clutch Assembly	RD10001	Bail Trip Lever	RD10046	Rear Shield
RD 8162	Handle Shaft Seal	RD10002	Bail Trip Cover	RD10047	Rear Protector A
RD 8164	Coned Disc Spring	RD10003	Bail Arm	RD10048	Handle Assembly
RD 8165	Large Handle Shank Washer	RD10004	Bail Spring Cover		
RD 8167	Handle Shaft Screw	RD10005	Rotor		
RD 8176	Oscillating Pawl Cover	RD10006	Rotor Side Cover	RD 9811	Reel Seat Spacer
RD 8389	Key Washer B	RD10007	Rotor Side Cover Guard	RD10049	Handle Shaft (right)

(170124)