SHIMANO

SAROS A-RB

SAR-2500FA

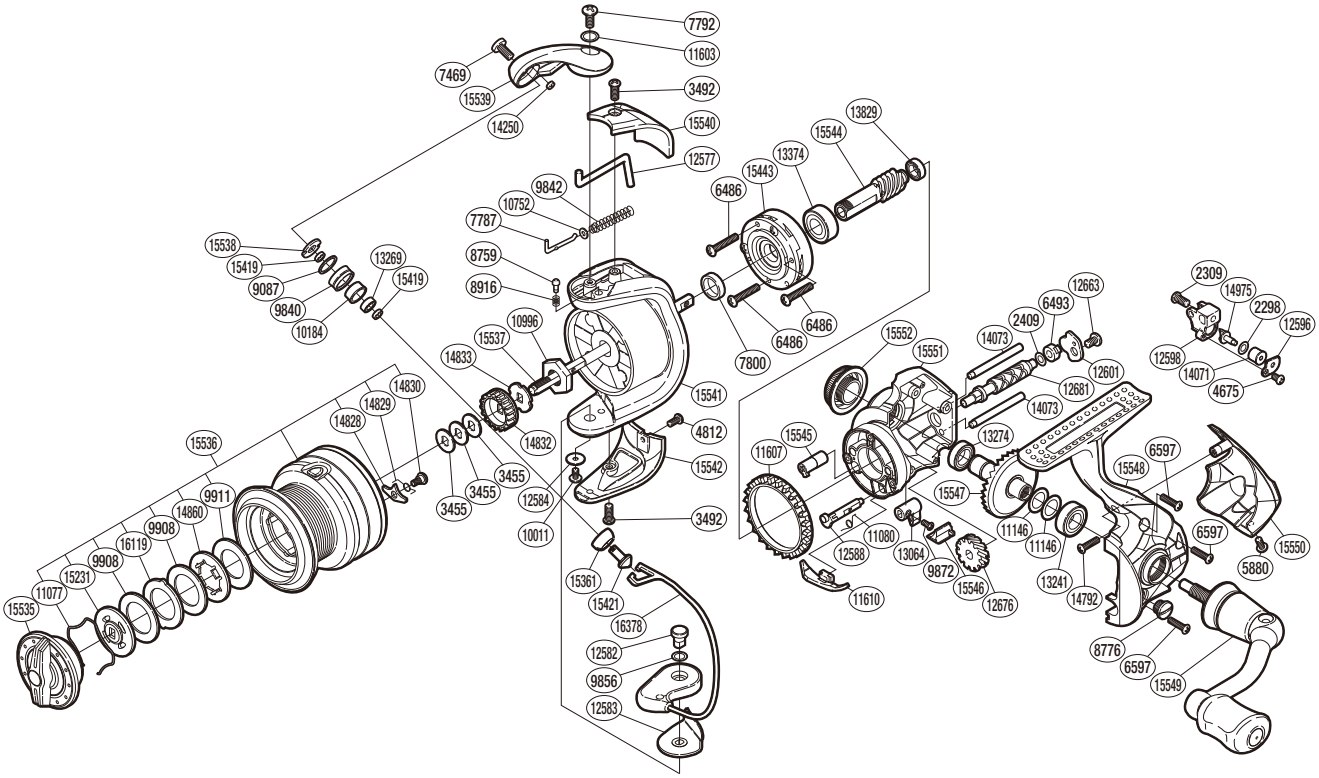

Please note that the number of adjusting washers may not be the same as shown in the exploded views. (Adjustment will vary with each individual product.)

(51SE762501U)

Part No.	Description		Part No.	Description		Part No.	Description	
RD 2298	Spacer	***	RD11146	Washer	**/*****	RD14975	Oscillating Pawl	***
RD 2309	Screw		RD11603	Washer		RD15231	Key Washer	
RD 2409	Spacer	***	RD11607	Friction Ring		RD15361	Line Roller Support Cover	*
RD 3455	Spool Washer		RD11610	Bail Trip Strike		RD15419	Bearing Spacer	*
RD 3492	Screw		RD12577	Bail Trip Lever		RD15421	Line Roller Support	*
RD 4675	Screw		RD12582	Bail Hold Support Shaft		RD15443	Roller Clutch Assembly	
RD 4812	Screw		RD12583	Bail Hold Support Spacer		RD15535	Drag Knob	
RD 5880	Screw		RD12584	Washer		RD15536	Spool Assembly	
RD 6486	Screw		RD12588	Anti-Reverse Cam		RD15537	Main Shaft	
RD 6493	Worm Bushing (rear)	***	RD12596	Oscillating Pawl Cover		RD15538	Line Roller Plate	*
RD 6597	Screw		RD12598	Oscillating Slider		RD15539	Bail Arm	
RD 7469	Screw	*	RD12601	Worm Shaft Retainer		RD15540	Bail Spring Cover	
RD 7787	Bail Spring Guide A		RD12663	Screw		RD15541	Rotor	
RD 7792	Screw		RD12676	Idle Gear	**	RD15542	Bail Hold Support Guard	
RD 7800	Rotor Ring		RD12681	Worm Shaft	***	RD15544	Pinion Gear	**
RD 8759	Click Pin		RD13064	Anti-Reverse Lever		RD15545	Worm Bushing (front)	***
RD 8776	Oil Cap		RD13241	Ball Bearing	*****	RD15546	Anti-Reverse Lever Cover	
RD 8916	Click Spring		RD13269	Ball Bearing	*	RD15547	Drive Gear	**
RD 9087	Line Roller Spacer	*	RD13274	Ball Bearing	*****	RD15548	Side Cover	
RD 9840	Line Roller	*	RD13374	Ball Bearing	*****	RD15549	Handle Assembly	
RD 9842	Bail Spring		RD13829	Ball Bearing	*****	RD15550	Rear Protector	
RD 9856	Washer		RD14071	Oscillating Slider Bushing	***	RD15551	Body	
RD 9872	Screw		RD14073	Oscillating Guide		RD15552	Handle Screw Cap	
RD 9908	Drag Washer		RD14250	Line Roller Oil Cap		RD16119	Eared Washer	
RD 9911	Drag Washer		RD14792	Screw		RD16378	Bail Assembly	
RD10011	Screw		RD14828	Drag Click	******			
RD10184	Line Roller Bushing	*	RD14829	Drag Click Spring	******	PK 0137	Line Roller Set	*
RD10752	Bail Spring Guide A Support		RD14830	Screw	******	PK 0139	Gear Set	**
RD10996	Rotor Nut		RD14832	Spool Support A		PK 0388	Oscillation Set	***
RD11077	Drag Washers Retainer		RD14833	Spool Support B		PK 0081	Bearing Set	*****
RD11080	Anti-Reverse Cam Spring		RD14860	Key Washer		PK 0085	Drag Clicker Set	******

(160113)